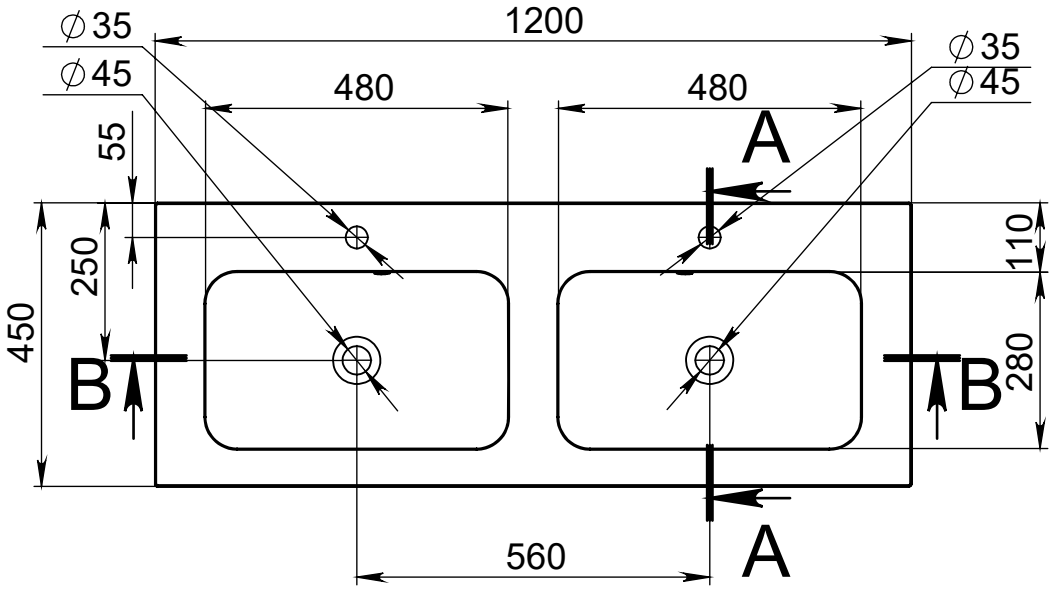


A-A

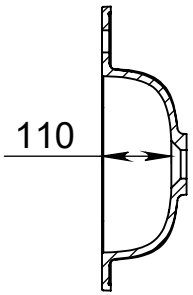


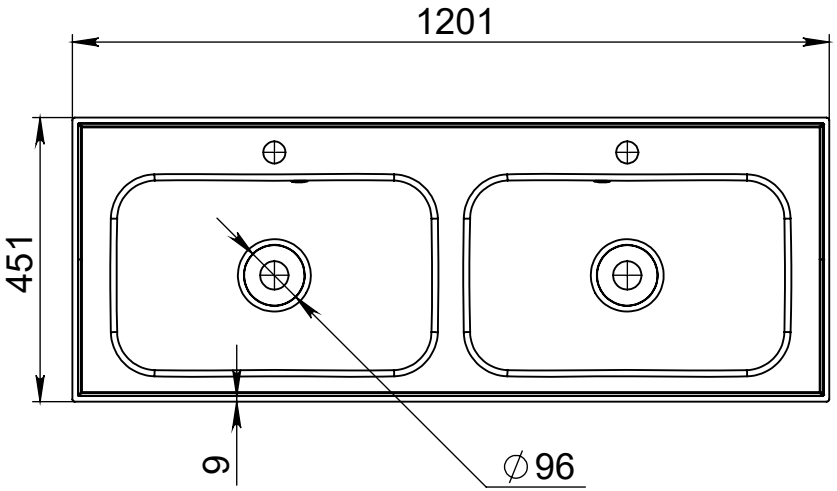


B-B

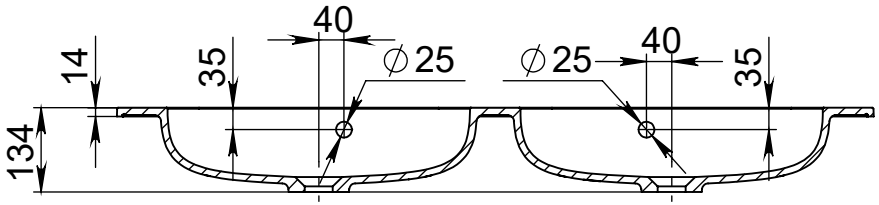


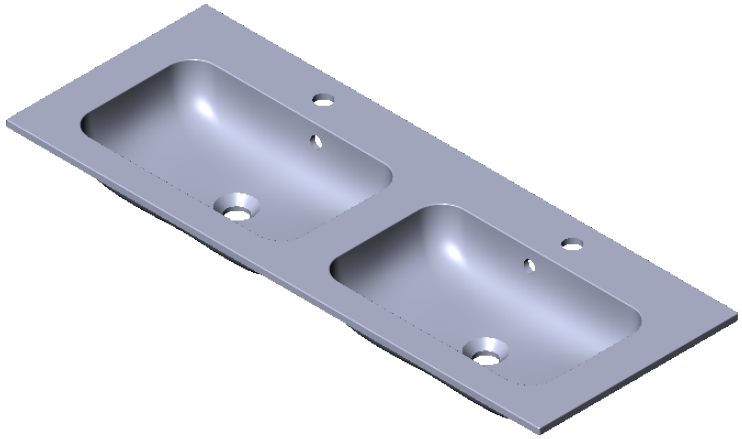

| | | | | | | |
|---|---|---|---|---|---|---|
| Length tolerance | +3/-3 mm | Design engineer | Date of project | Lenght tolerance (mm) +3/-3 mm | Scale | 1:10 |
| Width tolerance | +1,5/-1,5mm | Project ID 01.41 | | Name | Della 1200D | |
| Tap hole positional tolerance | +3/-3 mm | Miraggio | | Art. Nº | | |
| Overflow positional tolerance | +3/-3 mm | | | Dimensions | 1200/450 | |
| Hightth tolerance | +2/-2 mm | | | Weight tolerance | ±3% | Weight |