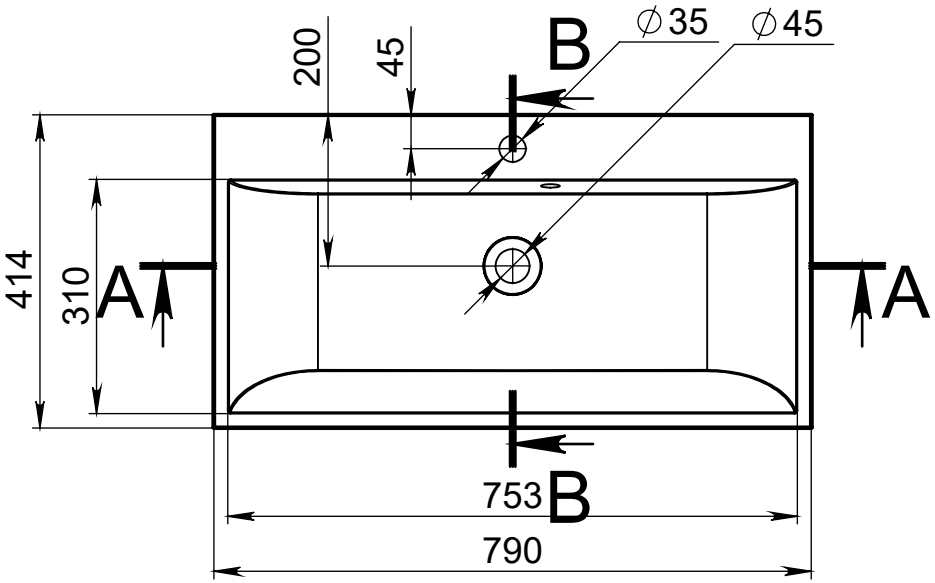

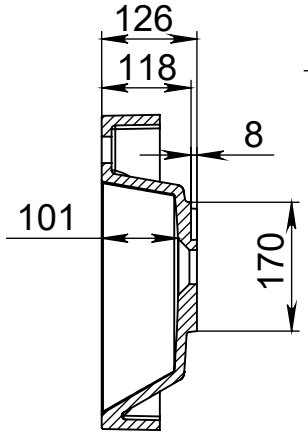

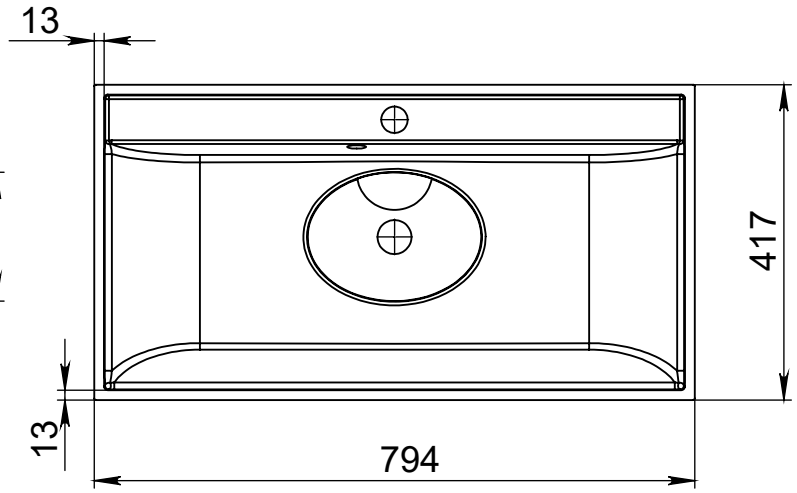

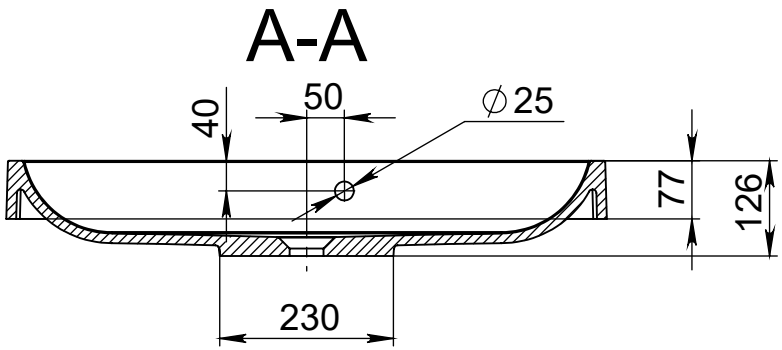

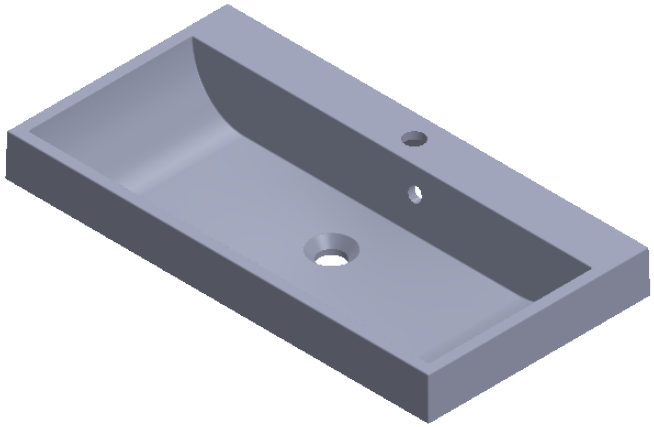

Length tolerance	+3/-3 mm	Design engineer	Date of project	Lenght tolerance (mm) +3/-3 mm	Scale	1:10	
Width tolerance	+1,5/-1,5mm	Project ID 01.12		Name	Varna 800c		
Tap hole positional tolerance	+3/-3 mm	Miraggio		Art. Nº			
Overflow positional tolerance	+3/-3 mm			Dimensions	794/417		
Hightth tolerance	+2/-2 mm			Weight tolerance	±3%	Weight	19.5